GTC Test Console

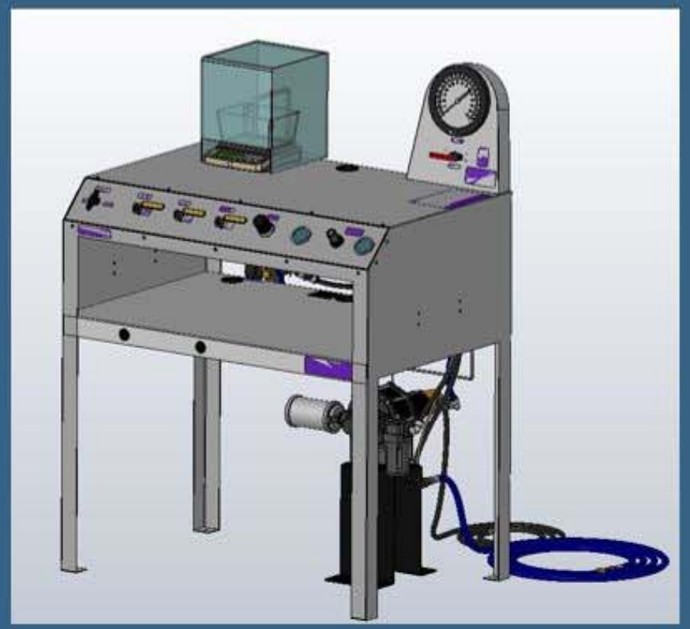

- Manually tests up to 10-12 high or low pressure cylinders of all types per hour.
- Expansion measured with electronic accuracy to 1/10 CC by the EEMS (Electronic Expansion Measuring System) system by LCD display.
- Can be configured to a 1 or 2 test jacket system
- Use for Steel, Aluminum, Composite Exemption cylinder testing.
- Low maintenance powder coated cabinet
- Highly reliable air driven intensifier pump.
- No cost operator training at the Galiso facility.
- One year warranty. Extended to 18 months when installed by a Galiso Field Service Technician
- When used in high/low pressure combinations, an additional pressure gauge is required.

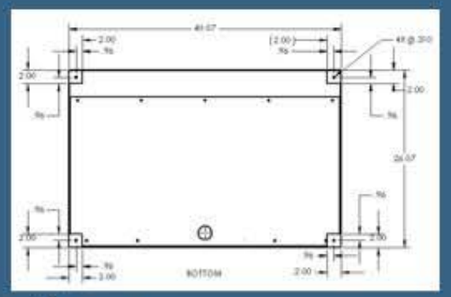

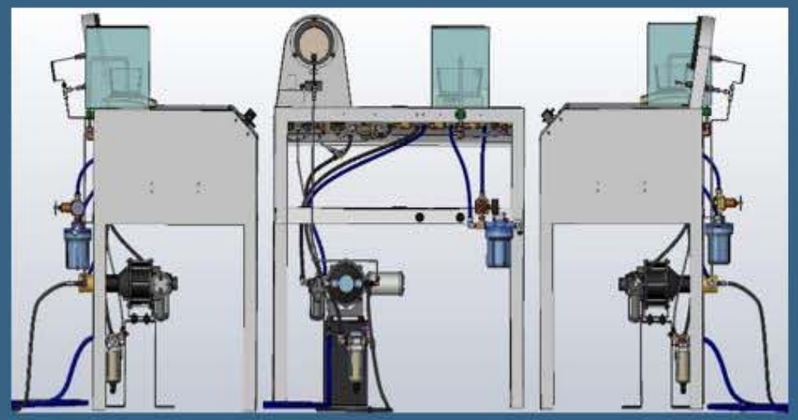

Installation:
****VIDEO****
Training:
****VIDEO****

- Dimensions Console ..... 26" L x 40" W x 56" H
- Electrical Requirements .....220 or 110Volts, 50/60 Hz
- Air ..... 120 PSI, 10 CFM
- Water.....City Water Pressure
- Cylinder Expansion Measurement.....800cc Standard up to 30,000+
- Pump.....10,000psi Standard Up to 50,000psi
- Pump Pressurization rate..... ¼ gpm@5500psi (10k pump)

GALISO® INCORPORATED
GASES LIQUIDS SOLIDS